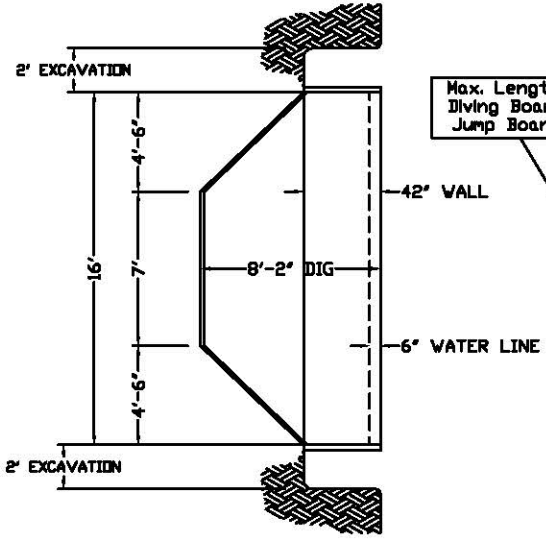

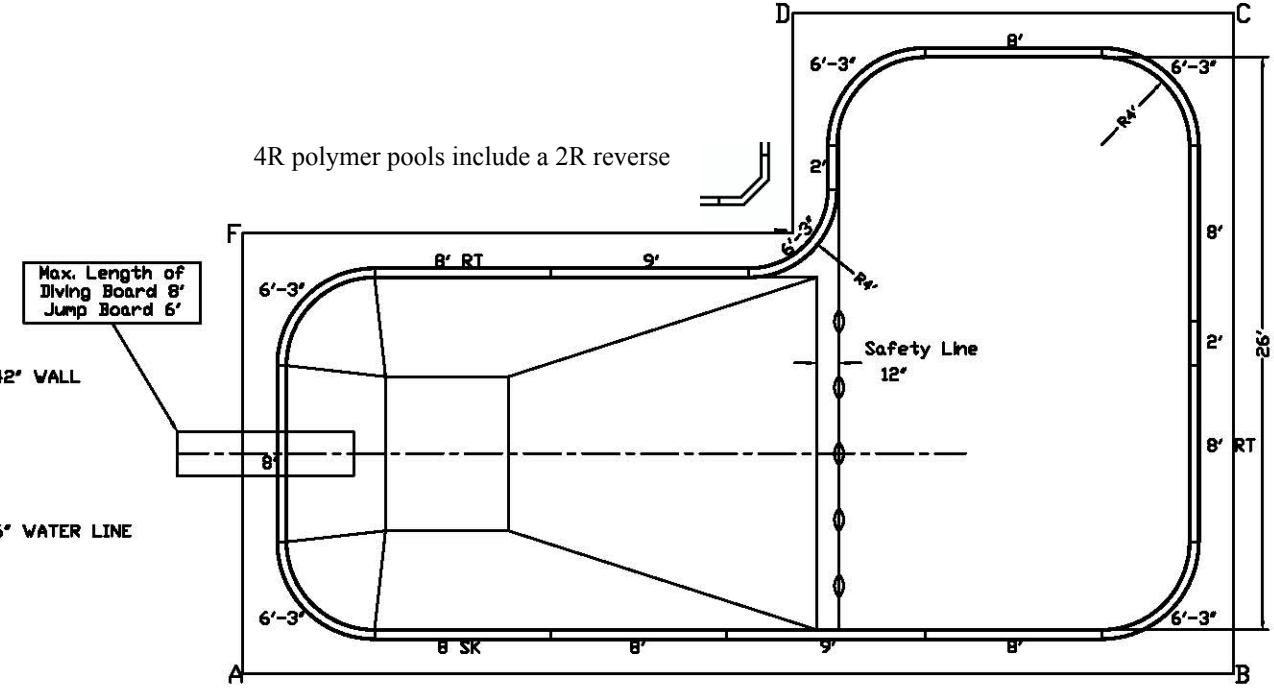

Polymer pool kits have maximum 6' panel length

STAKE OUT	
A-C	54'-1"
A-E	32'-0 1/8"
B-D	36'-0 5/8"
B-E	28'-3 3/8"
B-F	49'-2 7/8"
C-E	22'-4 3/8"

N.S.P.I. TYPE II DIVING

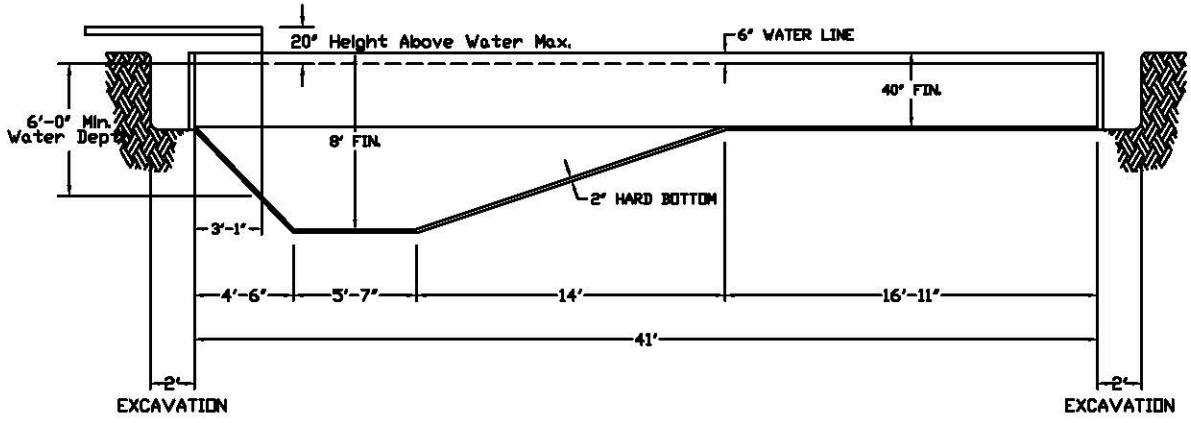

Classic Series

RoyalSwimmingPools.com

877-602-7067

16x41x26 SQUARE-L RIGHT

DRAWN BY: NM	Revisions		PER.: 123' -8"
DATE: 02/02/07	1		S.A.: 802. 265 ft²
SCALE: NTS	2		VOL.:
DRAWING NUMBER: ALP1641RSL407			APPROVED: